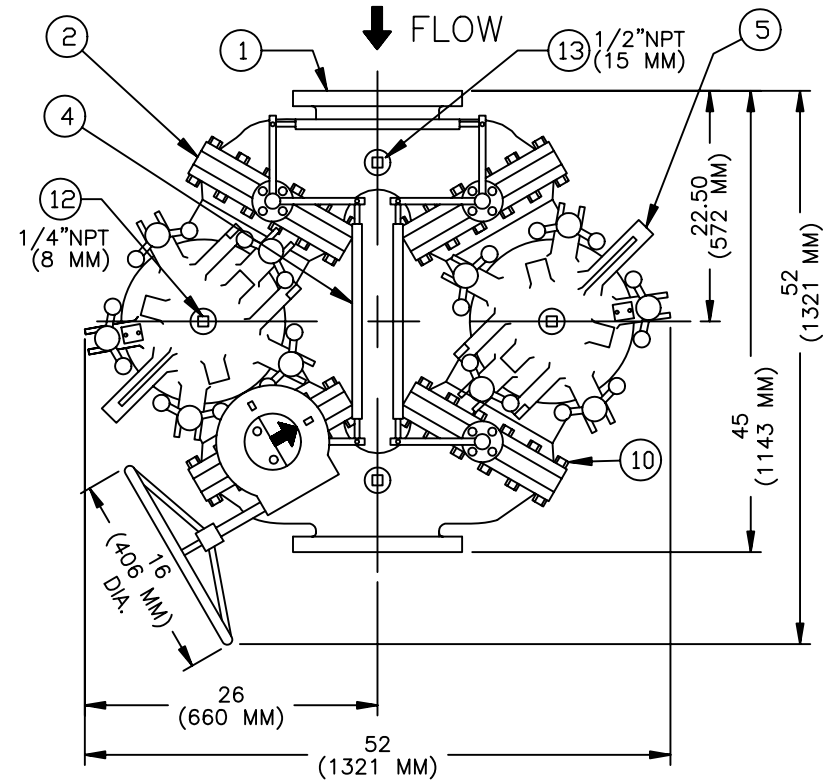

NO.	DESCRIPTION	MATERIAL
1	FLANGED Y	BRONZE
2	BUTTERFLY VALVE	BODY: IRON SEAL: EPDM DISC: ALUM. BRONZE
3	BODY	BRONZE
4	LINKAGE	STEEL
5	COVER	BRONZE
6	SWING BOLTS	CARBON STEEL
7	GEAR OPERATOR	IRON
8	BASKET	
	PERF. DIA.	
	MESH SIZE	
9	O-RING	BUNA-N
10	BOLT/NUT	CARBON STEEL
11	PIPE PLUG (DRAIN)	BRONZE
12	PIPE PLUG (VENT)	BRONZE
13	PIPE PLUG (GAGE)	BRONZE

NOTES:

1. INLET/OUTLET FLANGE PER ANSI B16.24 CLASS 150 FF FLANGE.
2. MAX. WORKING PRESS.: 200 PSI @100° F. (13.8 BAR @ 37.8° C)
3. DIMENSIONS ARE IN INCHES / (MM).
4. WEIGHT: 1840 LBS. (836 KG.)

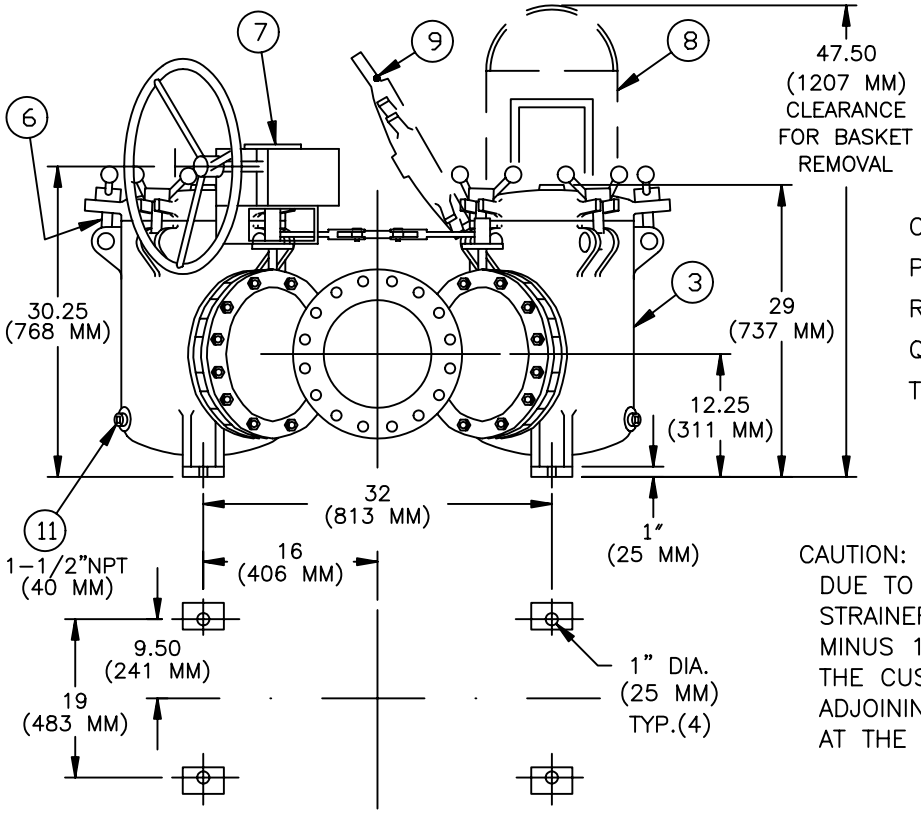

PLAN VIEW
(MOUNTING)

CUSTOMER:

P.O. NO.:

REG. NO.:

QUOTE NO.:

TAG NO.:

CAUTION:
DUE TO THE TYPE OF CONSTRUCTION OF THIS STRAINER, ALL DIMENSIONS MAY VARY PLUS OR MINUS 1.50% OF THE CHARTED FIGURES.
THE CUSTOMER IS ADVISED NOT TO FABRICATE ADJOINING PIPING UNTIL RECEIPT OF THE UNIT AT THE JOB SITE.

EATON FILTRATION, LLC
900 FAIRMOUNT AVENUE, ELIZABETH, NEW JERSEY 07207

NAME: MODEL 50 DUPLEX STRAINER
150# FLAT FACE FLANGE
SIZE 10" BRONZE

DRAWN	FM	DATE	1/25/95	CERT.	LF	DATE	1/25/95

SIZE	DWG NO	REV
A	SD052106	C

UNAUTHORIZED USE, MANUFACTURE OR REPRODUCTION IN WHOLE OR IN PART IS PROHIBITED. DRAWING, DESIGN AND OTHER DISCLOSURES PROPERTY OF EATON FILTRATION, LLC

ELECTRONIC FILE NAME: SD052106.DWG

REF. ECR	D507	DATE	11/1/05